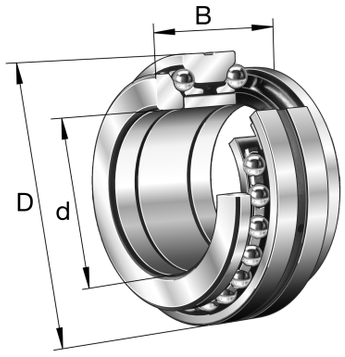

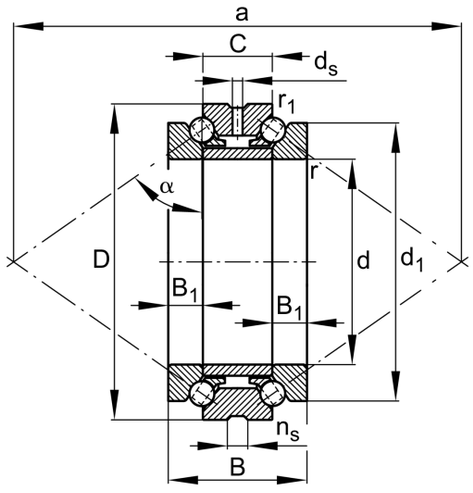

Bore Diameter (d)	160 mm
Outside Diameter (D)	240 mm
Width (B)	96 mm
Width (C)	48 mm
Dynamic Load AxialCA	39116.76 lbs
Static Load Axial ca	141629.63 lbs
Brand	FAG

COMPONENT	Axial Angular Contact Bearings

Pacific International Bearing, Inc.
33258 Central Ave, Union City, CA 94587
1-800-228-8895, 510-512-7000,
info@pibsales.com
www.pibsales.com

This file and any associated information and specifications are provided for reference and evaluation purposes only, and is subject to change without notice. PIB makes no representations, warranties or guarantees as to the appropriateness, accuracy, completeness, or suitability for any purpose, of the file, information or specifications. You are solely responsible for the use of the file, information or specifications.

234432-M-SP

FAG

160mm X 240mm X 96mm, Axial Angular Contact, Ball Bearing, Double Direction, Seperable, Restricted Tolerance

UNIT	Metric
SHEET	