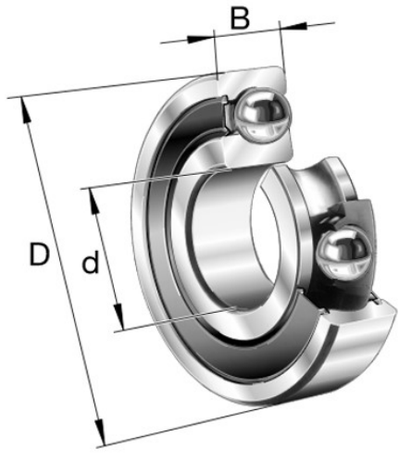

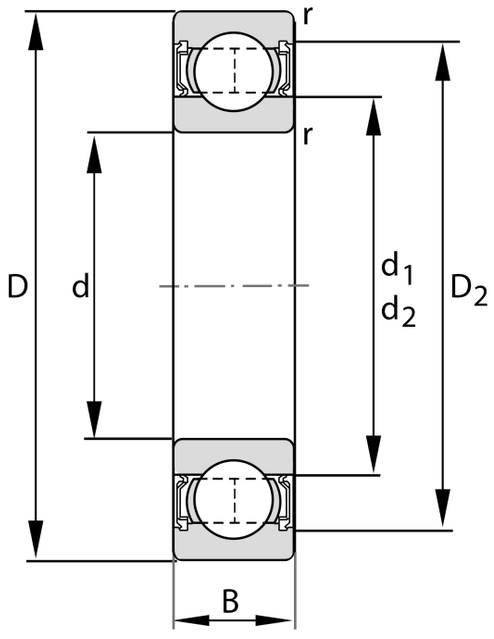

Bore Diameter (d)	20 mm
Outside Diameter (D)	52 mm
Width (B)	15 mm
Closure	Rubber Seal Non-Contact
Ring Material	52100 Chrome Steel
Ball Material	52100 Chrome Steel
Brand	FAG
Precision	Abec 3
Radial Clearance	C3
Lubrication	L038 Mobil Polyrex EM Grease
Dynamic Load(Cr)	3596.94 lbs
Static Load(C0r)	1753.51 lbs
Series	6304

COMPONENT	METRIC SERIES SEALED

Pacific International Bearing, Inc.
33258 Central Ave, Union City, CA 94587
1-800-228-8895, 510-512-7000,
info@pibsales.com
www.pibsales.com

This file and any associated information and specifications are provided for reference and evaluation purposes only, and is subject to change without notice. PIB makes no representations, warranties or guarantees as to the appropriateness, accuracy, completeness, or suitability for any purpose, of the file, information or specifications. You are solely responsible for the use of the file, information or specifications.

6304.2RSR.C3

FAG

20 Mm X 52 Mm X 15 Mm, Single Row Radial, Deep Groove Ball Bearing, Two Non Contact Rubber Seals

UNIT

METRIC

SHEET