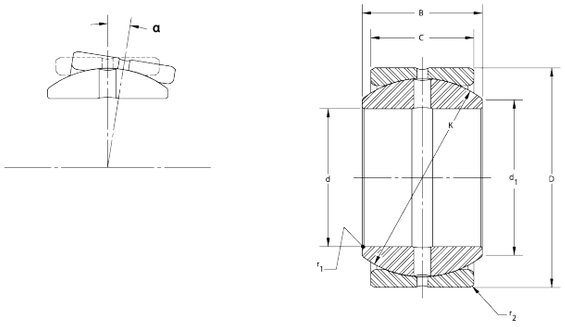

Bore Diameter (d)	.5000 in
Outside Diameter (D)	.8750 in
Width (B)	.4370 in
Closure	Open
Brand	RBC

COMPONENT	Spherical Plain Bearing

Pacific International Bearing, Inc.
33258 Central Ave, Union City, CA 94587
1-800-228-8895, 510-512-7000,
info@pibsales.com
www.pibsales.com

This file and any associated information and specifications are provided for reference and evaluation purposes only, and is subject to change without notice. PIB makes no representations, warranties or guarantees as to the appropriateness, accuracy, completeness, or suitability for any purpose, of the file, information or specifications. You are solely responsible for the use of the file, information or specifications.

B8L

RBC

.5000in X .8750in X .4370in, Spherical Plain Bearing, Unsealed, Inch

UNIT	Inch
SHEET	