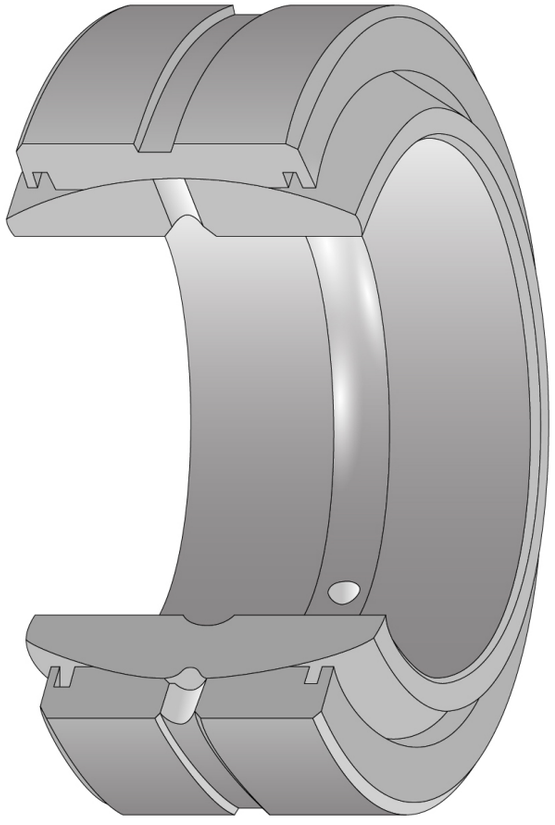

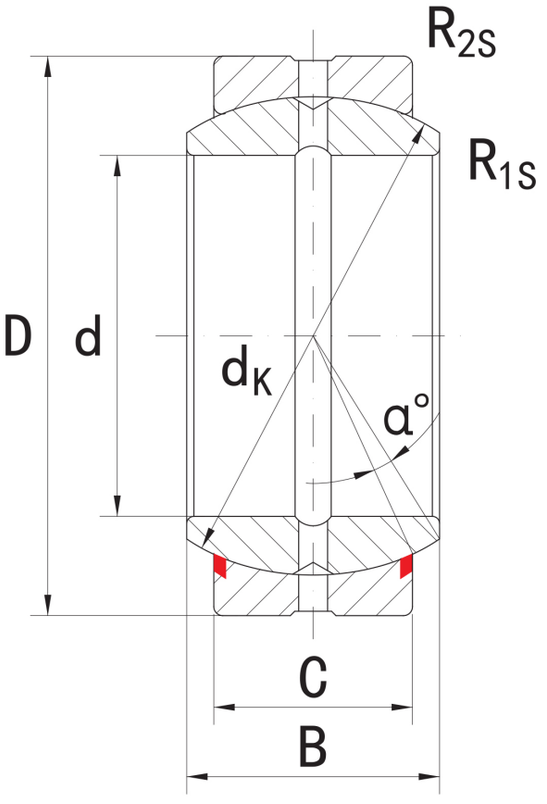


| | |
|---|---|
| Bore Diameter (d) | 25 mm |
| Outside Diameter (D) | 42 mm |
| Width (B) | 20 mm |
| C | 16 mm |
| Sliding Contact Surf | Steel/Steel |
| Dynamic Load Cap (C) | 10791 lbs |
| Static Load Cap (C0) | 53954 lbs |
| Brand | PIB |

| COMPONENT | GE ES Series Metric |
|---|---|


Pacific International Bearing, Inc.
33258 Central Ave, Union City, CA 94587
1-800-228-8895, 510-512-7000,
info@pibsales.com
www.pibsales.com



This file and any associated information and specifications are provided for reference and evaluation purposes only, and is subject to change without notice. PIB makes no representations, warranties or guarantees as to the appropriateness, accuracy, completeness, or suitability for any purpose, of the file, information or specifications. You are solely responsible for the use of the file, information or specifications.


# GE25ES

PIB

25mm X 42mm X 20mm, Spherical Plain Bearing, Steel/steel

UNIT

METRIC

SHEET