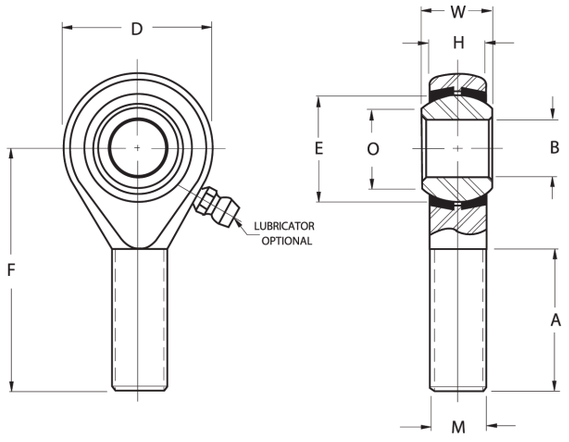

Bore Diameter (d)	.4375 in
O.D. (D)	1.1250 in
Width (B)	.5620 in
Brand	RBC
Outer Eye Diameter	.4370 in
Total Length (l2)	2.6875 in
Insert Material	Brass
Lubricating Type	Non-Lubricatable
Thread Direction	Left Hand
Thread Type	Male

COMPONENT	Male Spherical Plain Rod End

Pacific International Bearing, Inc.
33258 Central Ave, Union City, CA 94587
1-800-228-8895, 510-512-7000,
info@pibsales.com
www.pibsales.com

This file and any associated information and specifications are provided for reference and evaluation purposes only, and is subject to change without notice. PIB makes no representations, warranties or guarantees as to the appropriateness, accuracy, completeness, or suitability for any purpose, of the file, information or specifications. You are solely responsible for the use of the file, information or specifications.

HML7C

RBC

.4375in X 1.1250in X .5620in, Rbc Heim Rod End Bearing, 4 Piece - Metal To Metal, Male Spherical Plain Rod End, Left Handed Thread

UNIT	Inch
SHEET	