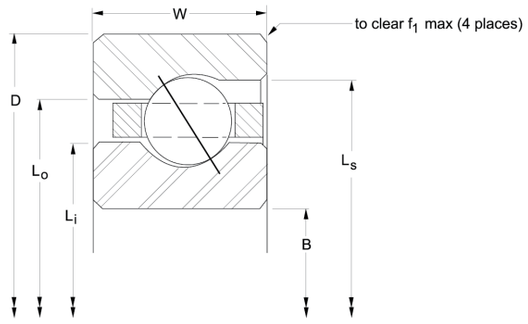

Bore Diameter (d)	4.2500 in
Outside Diameter (D)	4.8800 in
Width (B)	.3125 in
Closure	Open
Ring Material	52100 Chrome Steel
Ball Material	52100 Chrome Steel
Brand	RBC
Precision	Abec 1
Radial Clearance	C0

COMPONENT	Precision Thin Section

Pacific International Bearing, Inc.
33258 Central Ave, Union City, CA 94587
1-800-228-8895, 510-512-7000,
info@pibsales.com
www.pibsales.com

This file and any associated information and specifications are provided for reference and evaluation purposes only, and is subject to change without notice. PIB makes no representations, warranties or guarantees as to the appropriateness, accuracy, completeness, or suitability for any purpose, of the file, information or specifications. You are solely responsible for the use of the file, information or specifications.

KB042AR0-RBC

RBC

4.2500in X 4.8800in X .3125in, Thin Section Ball Bearings, Angular Contact Type-a, Open, Brass Cage

UNIT	Inch
SHEET	