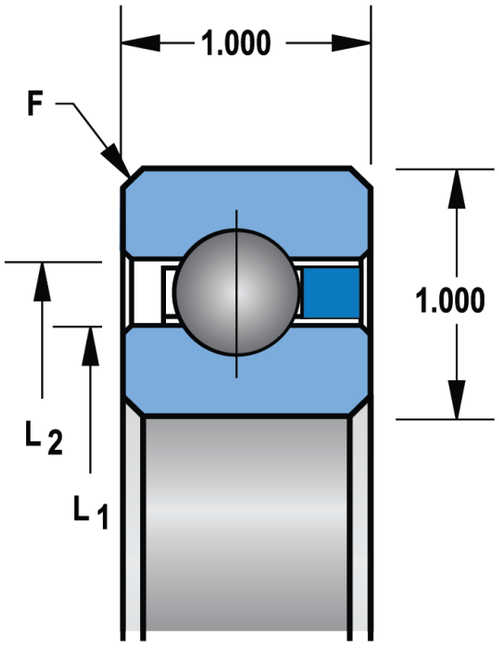

Bore Diameter (d)	9.0 in
Outside Diameter (D)	11.0 in
Width (B)	1.0 in
Brand	KAYDON
L1	9.7420 in
L2	10.2580 in

COMPONENT	Precision Thin Section

Pacific International Bearing, Inc.
33258 Central Ave, Union City, CA 94587
1-800-228-8895, 510-512-7000,
info@pibsales.com
www.pibsales.com

This file and any associated information and specifications are provided for reference and evaluation purposes only, and is subject to change without notice. PIB makes no representations, warranties or guarantees as to the appropriateness, accuracy, completeness, or suitability for any purpose, of the file, information or specifications. You are solely responsible for the use of the file, information or specifications.

KG090CP0

KAYDON

9in X 11in X 1in, Thin Section Bearing, Radial Contact Type C, Open Reali-slim, 1/2" Balls

UNIT

INCH

SHEET