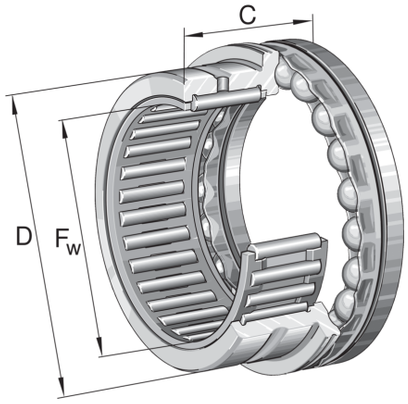

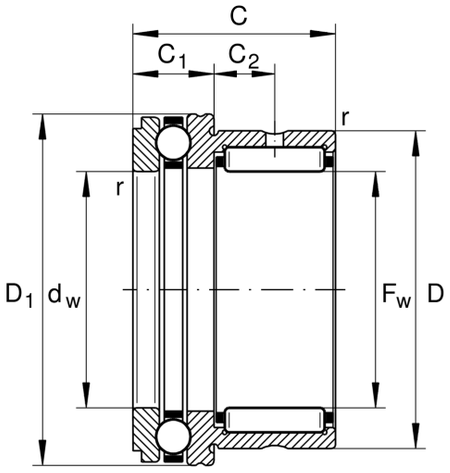

Bore Diameter (d)	40 mm
Outside Diameter (D)	52 mm
Width (B)	32 mm
Brand	INA
Dynamic Load(Cr)	6631.86 lbs
Static Load(C0r)	10566.02 lbs
Dynamic Load AxialCA	6069.84 lbs
Static Load Axial ca	14162.96 lbs
Speed Limit (RPM)	4000

COMPONENT	Needle Roller Axial Ball Bearings

Pacific International Bearing, Inc.
33258 Central Ave, Union City, CA 94587
1-800-228-8895, 510-512-7000,
info@pibsales.com
www.pibsales.com

This file and any associated information and specifications are provided for reference and evaluation purposes only, and is subject to change without notice. PIB makes no representations, warranties or guarantees as to the appropriateness, accuracy, completeness, or suitability for any purpose, of the file, information or specifications. You are solely responsible for the use of the file, information or specifications.

NKX40-XL

INA

40mm X 52mm X 32mm, Needle Roller, Axial Ball Bearing, Single Direction, No End Cap, For Oil Lubrication

UNIT	Metric
SHEET	