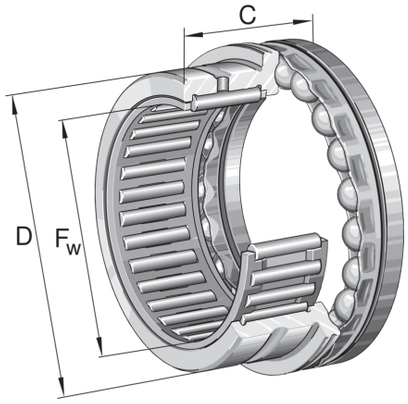

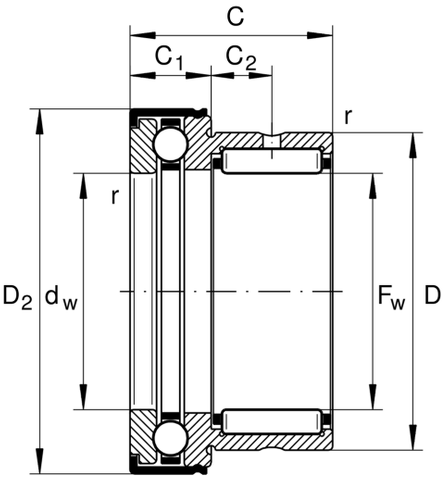

Bore Diameter (d)	50 mm
Outside Diameter (D)	62 mm
Width (B)	35 mm
Brand	INA
Dynamic Load(Cr)	9666.78 lbs
Static Load(C0r)	16635.86 lbs
Dynamic Load AxialCA	6519.46 lbs
Static Load Axial ca	16860.67 lbs
Speed Limit (RPM)	3300

COMPONENT	Needle Roller Axial Ball Bearings

Pacific International Bearing, Inc.
33258 Central Ave, Union City, CA 94587
1-800-228-8895, 510-512-7000,
info@pibsales.com
www.pibsales.com

This file and any associated information and specifications are provided for reference and evaluation purposes only, and is subject to change without notice. PIB makes no representations, warranties or guarantees as to the appropriateness, accuracy, completeness, or suitability for any purpose, of the file, information or specifications. You are solely responsible for the use of the file, information or specifications.

NKX50-Z-XL

INA

50mm X 62mm X 35mm, Needle Roller, Axial Ball Bearing, Single Direction With End Cap, For Grease Lubrication

UNIT	Metric
SHEET	