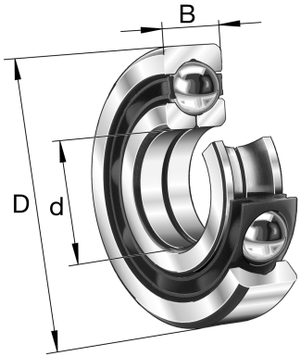

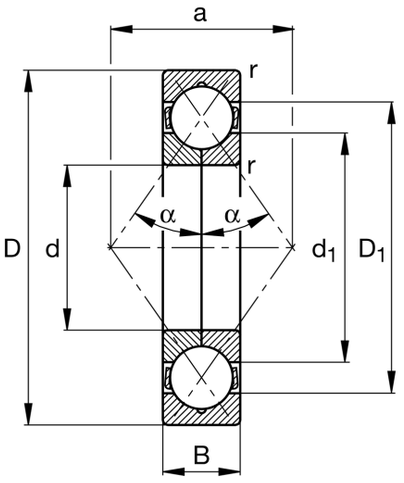

Bore Diameter (d)	45 mm
Outside Diameter (D)	85 mm
Width (B)	19 mm
Brand	FAG

COMPONENT	Four-Point Contact Bearing

Pacific International Bearing, Inc.
33258 Central Ave, Union City, CA 94587
1-800-228-8895, 510-512-7000,
info@pibsales.com
www.pibsales.com

This file and any associated information and specifications are provided for reference and evaluation purposes only, and is subject to change without notice. PIB makes no representations, warranties or guarantees as to the appropriateness, accuracy, completeness, or suitability for any purpose, of the file, information or specifications. You are solely responsible for the use of the file, information or specifications.

QJ209-XL-TVP

FAG

45mm X 85mm X 19mm, Four-point Contact Bearing, X-life, Plastic Cage, Qj2..-xl-tvp Series

UNIT	METRIC
SHEET	