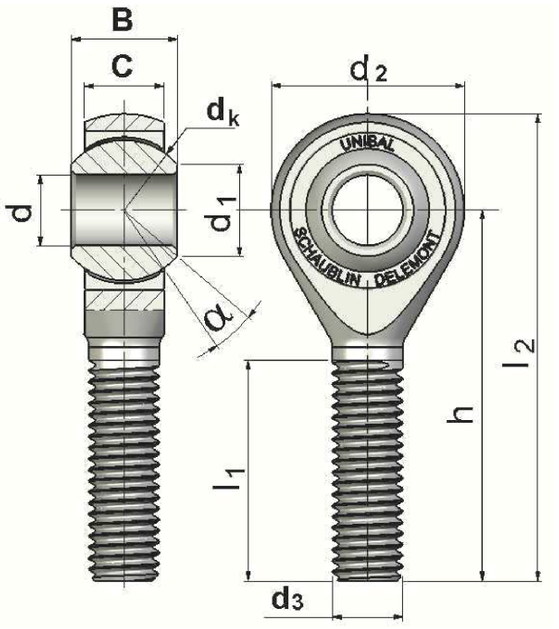

Bore Diameter (d)	12 mm
O.D. (D)	30 mm
Width (B)	16 mm
Brand	RBC
Outer Eye Diameter	12 mm
Total Length (l2)	69 mm
Insert Material	UniflonÂ® Self Lubricating Fabric
Thread Direction	Left Hand
Thread Type	Male

COMPONENT	Male Spherical Plain Rod End

Pacific International Bearing, Inc.
33258 Central Ave, Union City, CA 94587
1-800-228-8895, 510-512-7000,
info@pibsales.com
www.pibsales.com

This file and any associated information and specifications are provided for reference and evaluation purposes only, and is subject to change without notice. PIB makes no representations, warranties or guarantees as to the appropriateness, accuracy, completeness, or suitability for any purpose, of the file, information or specifications. You are solely responsible for the use of the file, information or specifications.

SMLE1240

RBC

12mm X 30mm X 16mm, Rbc Rod End Bearing, Male, Self Lubricating, UniflonÂ® Self Lubricating Fabric, Left Handed Thread

UNIT	Metric
SHEET	